FFUBA MLS-M拉線式譯碼器 MLS系列

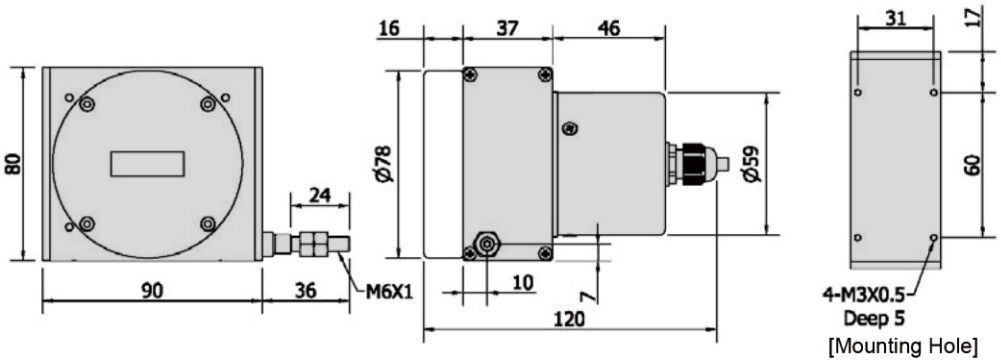

ELECTRICAL SPEC.

Detection System	Incremental 增量型
Output Wave 輸出波形	Square Wave 方波
Stroke (mm) 量測行程	500, 1000, 2000, 3000, 4000, 5000
Standard Resolution (mm/pulse) 解析	1, 0.5, 0.2, 0.1, *0.05 mm/pulse (*0.05 mm/pulse only for stroke: 500, 1000, 2000 mm)
Accuracy 精度	(stroke 500 ~ 1000 mm) ±0.03% FS, ±1 count; (stroke 2000 ~ 5000 mm) ±0.05% FS, ±1 count
Output Phase 輸出相	AB phase or ABZ phase
Electronics 電路特性	NPN Voltage, NPN Open Collector, Push Pull or Line Driver
Power Supply 供應電源	DC 8~26V, DC 5V fixed
Current Consumption 消耗電流	≤ 60 mA
Output Capacity 輸出容量	Sync. Current: 20 mA, Residual Voltage: 0.5V or less
Max. Response 最大響應頻率	10K Hz ~ 50K Hz
Phase Different 相位差	A, B phase different 90°±45° (T/4±T/8), Z phase T±T/2
Wave Form Rise / Fall 波形上下時間	2 μs or less
Polarity 極性保護	Against Reverse Protection (not with DC 5V)

MECHANICAL SPEC.

Wire Specification 線徑規格	Material: SUS304 with nylon coating (stroke < 3 m) Diameter: 0.6 mm; Breaking load: 16 Kg (stroke ≥ 3 m) Diameter: 0.7 mm; Breaking load: 23 Kg
Max. Travel Speed 最大往復速度	1,000 mm / sec.
Vibration 震動	10g (10±1,500 Hz)
Shock 衝擊	20g per 11 ms
Cable 電線	Ø5.4, 100 cm long
Weight 重量	< 1,000g
Starting Torque on Spring 拉力	(stroke < 2 m) Max. 600 g; (stroke ≥ 2 m) Max. 900 g

ENVIRONMENTAL SPEC.

Operating Temp. / Humidity 操作溫度/濕度	-10°C ~ 60°C, RH 35% ~ 90% (No Condensation)
Storage Temp. 儲存溫度	-20°C ~ 80°C
Protection 保護等級	IP64: Dust & Dripping Proof (only for encoder housing)
Life 壽命	Typical > 1 X 10^6 cycles

ORDERING INFORMATION

MLS-M - *Measuring Range 量測行程* - *Resolution 解析* - *Output Phase 輸出相* - *Electronics 電路特性* - *Supply Voltage 供應電源* - *Connection 連接器*

Measuring Range		Resolution	Output Phase	Electronics	Supply Voltage	Connection
05 : 500 mm	**30** : 3000 mm	**1** : 1 mm	**Blank**: AB phase	**Blank**: NPN Voltage	**Blank**: 8~26Vdc	**Blank**: Axial Cable
10 : 1000 mm	**40** : 4000 mm	**05** : 0.5 mm	*Z: ABZ phase	**C**: NPN Open-Collector	**5V**: 5Vdc fixed	*R7: Radial 7 pin
20 : 2000 mm	**50** : 5000 mm	**02** : 0.2 mm		**PP**: Push-Pull		*R10: Radial 10 pin
		01 : 0.1 mm		*L: Line Driver 5Vdc		
		005 : 0.05 mm		*HL: Line Driver 5~26Vdc		

*0.05 mm/pulse only for stroke: 500, 1000, 2000 mm